MABV Series Bleed Valves

(Replaces MPBV Series Ball Valves)

				Dimensions - inches (mm)		
Parker Part No.	Pressure psi (bar)	Connection	Orifice inch (mm)	A	B	C
6T7-MABV-V-SS	15,000 (1034)	3/8" Tube Stub	0.094 (2.39)	4.05 (102.87)	3.22 (81.79)	1.61 (40.89)
8T7-MABV-V-SS	15,000 (1034)	1/2" Tube Stub	0.094 (2.39)	4.50 (114.30)	3.68 (93.47)	1.88 (47.75)
9T7-MABV-V-SS	15,000 (1034)	9/16" Tube Stub	0.094 (2.39)	4.56 (115.82)	3.74 (95.00)	1.94 (49.28)

For 2507 Super Duplex option, replace **-SS** with **-2507**

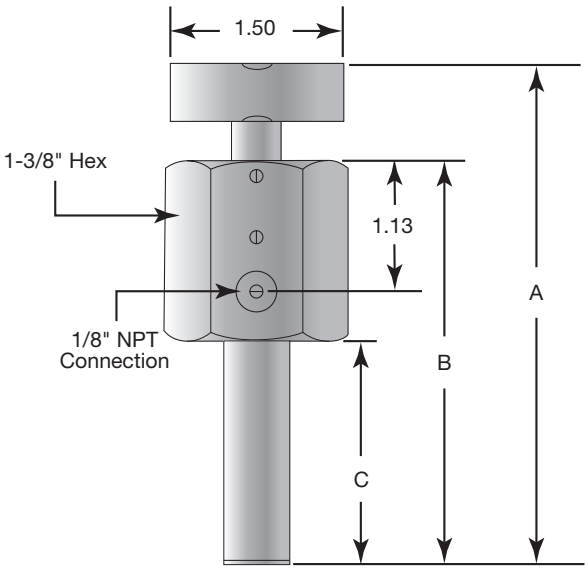

MAGV Series Gauge Valve with MABV Vent valve shown in one of three possible outlet locations.

Material of Construction

Item#	Qty	Description	Material
1	1	Handle	Aluminum
2	2	Spring Pin	18-8 SS
3	1	O-ring	Fluorocarbon Rubber
4	1	Body	316 SS
5	1	Hex Socket Set Screw	300 Series SS
6	1	Stem	316 SS

Note: No repair kit available, replace valve.

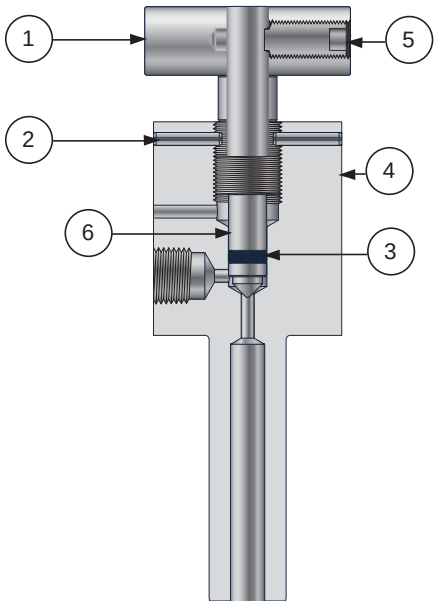

分销商：信德迈科技（北京）有限公司 电话010-84282935/13910962635 邮件sales@cnmec.biz